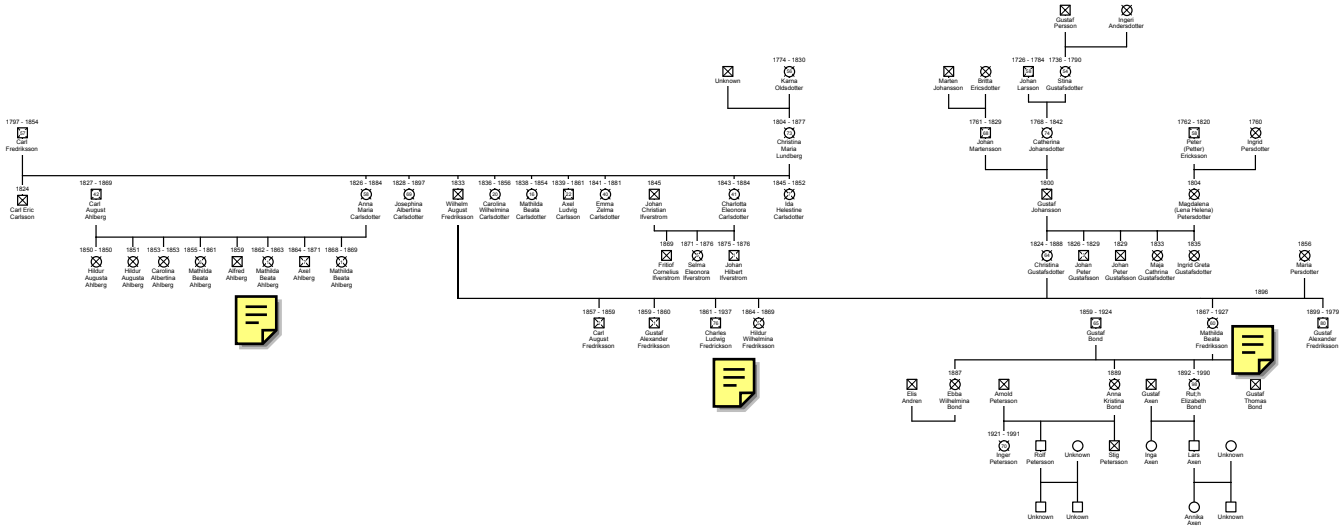
Gustaf Persson
Ingeri Anderdotter
1726 - 1784
1736 - 1790
Marten Johansson
Britta Ericsdotter
Johan Larsson
Stina Gustafsdotter
1761 - 1829
Johan Martensson
1768 - 1842
Catherina Johansdotter
1762 - 1820
Peter (Petter) Ericksson
1760
Ingrid Persdotter
1905
Gustaf Johansson
1904
Magdalena (Lena Helena) Petersdotter
1824 - 1888
Christina Gustafsdotter
1828 - 1829
Johan Peter Gustafsson
1829
Johan Peter Gustafsson
1833
Maia Cathrina Gustafsdotter
1835
Ingrid Greta Gustafsdotter
1856
Maria Persdotter
1896
1774 - 1830
Unknown
Karna Oldsdotter
1804 - 1877
Christina Maria Lundberg
1797 - 1854
Carl Fredriksson
1824
Carl Eric Carlsson
1827 - 1869
Carl August Ahlberg
1850 - 1850
Hildur Augusta Ahlberg
1851
Hildur Augusta Ahlberg
1853 - 1853
Carolina Albertina Ahlberg
1855 - 1861
Mathilda Beata Ahlberg
1859
Alfred Ahlberg
1862 - 1863
Mathilda Beata Ahlberg
1864 - 1871
Axel Ahlberg
1868 - 1869
Mathilda Beata Ahlberg
1826 - 1884
Anna Maria Carlsdotter
1828 - 1897
Josephina Albertina Carlsdotter
1833
Wilhelm August Fredriksson
1836 - 1856
Carolina Wilhelmina Carlsdotter
1838 - 1854
Mathilda Beata Carlsdotter
1839 - 1861
Axel Ludvig Carlsson
1841 - 1881
Emma Zelma Carlsdotter
1846
Johan Christian Ifverstrom
1843 - 1884
Charlotta Eleonora Carlsdotter
1845 - 1852
Ida Helleene Carlsdotter
1869
Fritof Cornelius Ifverstrom
1871
Selma Eleonora Ifverstrom
1876
Johan Hilbert Ifverstrom
1875 - 1876
1857 - 1859
Carl August Fredriksson
1859 - 1860
Gustaf Alexander Fredriksson
1861 - 1937
Charles Ludwig Fredricksson
1864 - 1869
Hildur Wilhelmina Fredriksson
1859 - 1924
Gustaf Bond
1867 - 1927
Mathilda Beata Fredriksson
1899 - 1979
Gustaf Alexander Fredriksson
1887
Elis Andren
Ebba Wilhelmina Bond
Arnold Petersson
1889
Anna Kristina Bond
Gustaf Axen
1892 - 1990
Ruth Elizabeth Bond
Gustaf Thomas Bond
1921 - 1991
Inger Petersson
Rolf Petersson
Unknown
Stig Petersson
Inga Axen
Lars Axen
Unknown
Unknown
Unknown
Annika Axen
Unknown