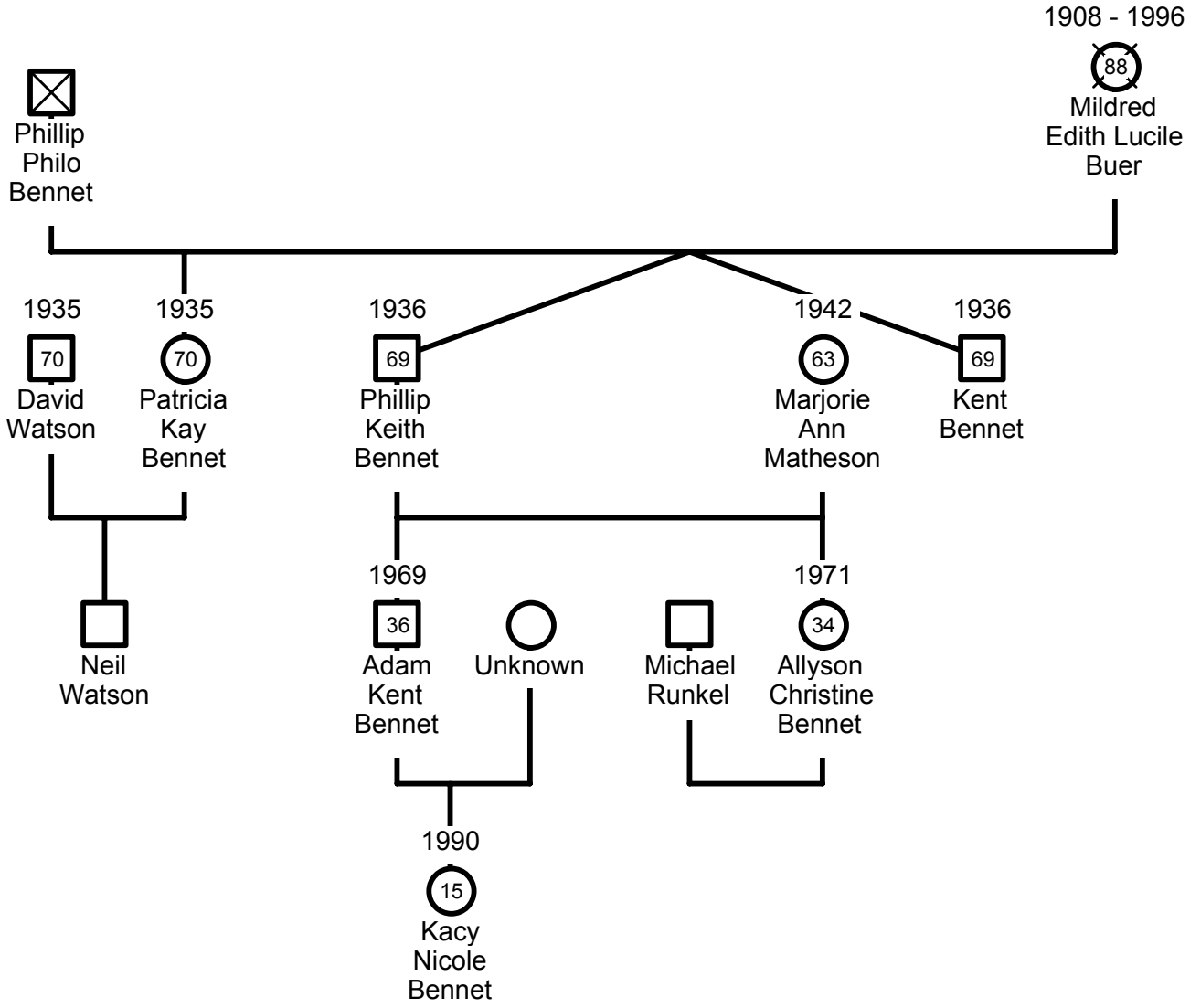
1908 - 1996
88
Mildred Edith Lucile Buer
Phillip Philo Bennet
1935
70
David Watson
1935
70
Patricia Kay Bennet
1936
69
Phillip Keith Bennet
1942
63
Marjorie Ann Matheson
1936
69
Kent Bennet
Neil Watson
1969
36
Adam Kent Bennet
Unknown
Michael Runkel
1971
34
Allyson Christine Bennet
1990
15
Kacy Nicole Bennet